RETRACTA F SERIES OIL REEL - TWIN PEDESTAL

5 YEARS MACNAUGHT WARRANTY

SCAN FOR MORE INFORMATION

The Retracta F Series range of heavy duty reels are designed and manufactured using the highest quality materials and finish that guarantee reliability and durability. The reels are ideal for use in a wide range of applications and can be fitted in a variety of positions such as wall, floor, tank, truck or overhead.

Adjustable roller guide direction for versatility

Fully Serviceable

Twin pedestal for strength and stability

Heavy duty powder coated steel construction

Heavy duty steel spring enclosure for safety and reliability

Two spring packs for maximum hose return power

TECHNICAL SPECIFICATIONS

Part Number	FN2523HOS-01
Colour	White
Hose Size (ID)	1” (25mm)
Hose Length	23m
Hose Material	Steel Wire Braided Synthetic Rubber
Working Pressure	1000 PSI
Max Temperature	60°C
Feed Hose Inlet	N/A
Reel Inlet	1” BSPT (F)
Hose Outlet	1” BSPT (M)
Feed Hose length	N/A
Weight	60.35kg

Applications:
Ideal for use in all workshop applications and also suitable for off-road service vehicle applications.

FEATURES AND BENEFITS

- Heavy duty powder coated steel construction
- Heavy duty steel spring enclosure for safety and reliability
- Twin pedestal for strength and stability
- Adjustable roller guide direction for versatility
- Two spring packs for maximum hose return power

PACKAGE INCLUDES
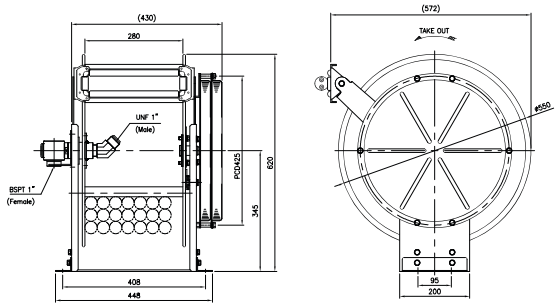
- Retracta F Series FN2523HOS-01 Hose reel & hose